Accurate Sensors Technology

Highly Accurate online infrared Non-Contact Pyrometers for Aluminum

AST A5-EXL

Temperature ranges:

Multi-wave 80 to 850°C (176 to 1562°F) single wave start from 50ºC/122ºF

Multi-wave 105 to 1150°C (221 to 2102°F) single wave start from 75ºC/167ºF

Multi-wave 130 to 1550°C (266 to 2822°F) single wave start from 95ºC/203ºF

AST A5-EXL is a specially designed IR Pyrometer for non-contact temperature measurement of aluminum and other shiny surfaces.

AST A5-EXL is a Multi-Wavelength, plug-and-play pyrometer that utilizes an application-specific database derived from years of experience in real-world applications.

AST A5-EXL utilizes specialized algorithms to calculate the actual temperature and emissivity of the surface precisely.

The AST A5-EXL can hold multiple databases, allowing a single instrument to easily switch between applications such as molten metal, Extruded profiles, Rolled aluminum surfaces, Continuous casting, Aluminum billets, and Slabs.

It features a laser pointer aligned with the detector, ensuring both the laser and detector are aimed at the same spot. This helps with precise aiming, even at long distances.

AST A5-EXL features Bluetooth communication, allowing users to connect with Android smartphones or laptops to view measured temperatures and adjust parameters and data.

Shading metallic measuring areas is essential at low temperatures to create a measurement zone free from external light interference.
The technical data pertains to measurements taken in front of a black body. The minimum temperature will be higher when measuring a glossy surface. Below 80 degrees, the pyrometer automatically switches to measuring at a single wavelength with a preset emissivity.

Features

- Simple to use - No calibration required
- High accuracy - (1%) in real site conditions
- Capable of measuring targets with variable emissivity
- Measures through smoke, dust, water vapor etc.
- Temperature ranges - see the table on next page.
- Temperature range for measurement in front of a blackbody, when measuring a shiny body minimum temperature will be higher.
- Rugged design
- Wide range of built-in functions
- AST NET SW software for PC
- AST Pyrometer Android Application via Bluetooth

Standard Scope of Supply

- Integrated laser pilot light
- Digital Interface RS-232
- Analog Output: 0…20mA or 4…20mA or 0-10V
- Calibration certificate, PC Software & Operation

Applications

- Aluminum Extrusion Profiles & Billets
- Aluminum Rolling
- Aluminum Casting
- Aluminum Forging
- Aluminum Continuous Casting

Optional

- Mechanical and Electrical Accessories
- RS-232, RS485, USB, Bluetooth, Alarm, Profinet Ethernet Profibus CanBus

Technical Specifications

Specification	Model A5-EXL
Temperature Range Multi-wave (Analog sub-range adjustable)	80 - 850°C 175 - 1562°F 105 - 1150°C 221 - 2102°F 130 - 1550°C 266 - 2822°F
Spectral Range	2.1…2.4 µm
Photodetector Type	InGaAs Extended
Distance to Spot Size Ratio	100:1 200:1
Protection Class	IP65
Response Time	Adjustable from 0.1 sec to 17 sec, Below 100^{0}C Recommended response time is 0.5sec
Accuracy and Repeatability	±1%
Sighting	Integrated Laser Pilot Light
Power Supply	24VDC
Analog Output	4-20 mA, 0-20 mA, 0-10V
Digital Output	RS-232, RS485, USB, Bluetooth, Alarm, Profinet Ethernet Profibus CanBus
Digital Display	P110
Sensor overall dimensions	215 x 110 x 105 mm / 8.46 x 4.33 x 4.13 in
Sensor weight	~2.0Kg / ~4.4lbs
Operating temperature range	0 to +50°C / 32 to +122°F
Storage temperature range	-20 to +70°C / -4 to +158°F

Spot Sizes

Measuring Distances [mm] / [in]	A5-EXL Spot Sizes [mm] / [in] Multi-wave			
	FOV 1:100	FOV 1:200		
	80 - 850°C 130 - 1652°F	105 - 1300°C 221 - 2102°F	130 - 1550°C 266 - 3822°F	
500 / 20	5 / 0.2	2.5 / 0.1		
1000 / 40	10 / 0.4	5 / 0.2		
1500 / 60	15 / 0.6	7 / 0.3		
2000 / 80	20 / 0.8	10 / 0.4		
2500 / 100	25 / 1.0	12.5 / 0.5		
5000 / 200	50 / 2.0	25 / 1.0		

Pyrometer Drawing

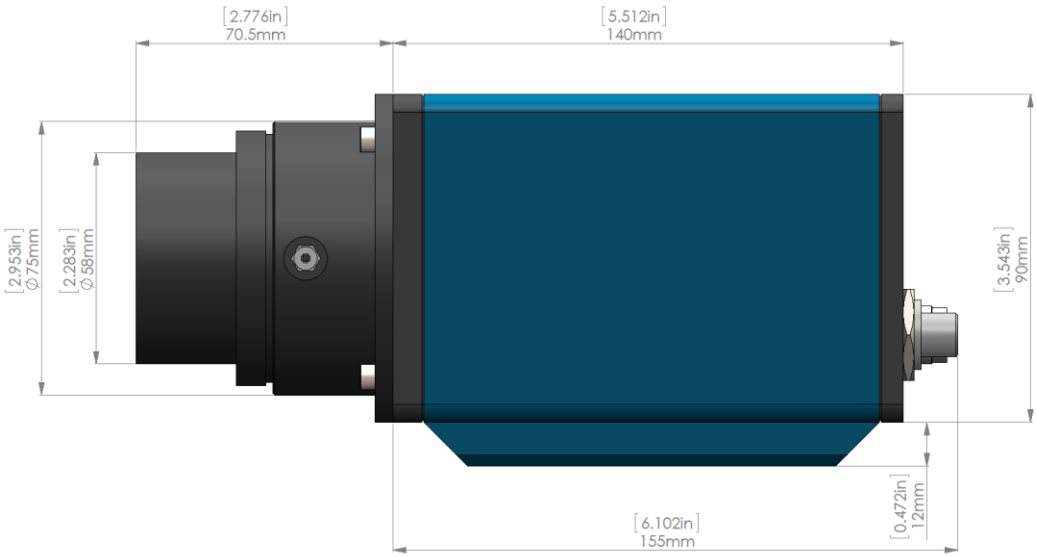

Accessories

AS3000 Application Selector (Reference no: 300-07)	Power Supply Unit (Reference no: 200-09)	Air Purge Tube 200 mm (Reference no: 200-03)	Display (Reference no: P-110)
			

Adjustable Mounting (Reference no: 200-01)	Air Purge Tube Adapter (Reference no: 200-02)	Frontal Water-Cooling Plate (Reference no: 200-06)	Top Water-Cooling Plate (Reference no: 200-10)
			

Accurate Sensors Technologies

Misgav Industrial Park, Misgav 2017400 Israel
Ph.: +972-4-9990025
E-mail: sales@accuratesensors.com
www.accuratesensors.com

We measure accurate temperature in extreme conditions